Safety crank, zinc-plated Siku

- With one-sided braking effect.
- The load is held safely at every height.
- With folding handle.

Ratchet pawl kit, zinc-plated
for crank execution
Siku and Raku
P13 EAN-No. 4025092 655811
P14 EAN-No. 4053981 827698

Technical data safety crank Siku

Model	EAN-No. 4025092* 4053981**	Capacity kg	Length of crank mm	Square drive mm	Drive torque max. Nm
Siku 1,5	**022703	1500	200	14	60
Siku 3	*562553	3000	250	14	60
Siku 5	*562553	5000	250	14	60
Siku 10	*993036	10000	300	17	120
Pfaff design					
Siku 1,5	*441469	1500	250	17	60
Siku 3	*441469	3000	250	17	60
Siku 5	*441469	5000	250	17	60

Safety ratchet crank, zinc-plated Raku

- Lifting or lowering movement adjustable by turning a lever.
- The load is held safely at every height.
- With folding handle.

Technical data safety ratchet crank Raku

Model	EAN-No. 4025092* 4053981**	Capacity kg	Length of crank mm	Square drive mm	Drive torque max. Nm
Raku 1,5	**022697	1500	200	14	60
Raku 3	*915649	3000	250	14	60
Raku 5	*915649	5000	250	14	60
Raku 10	*997492	10000	300	17	120
Pfaff design					
Raku 1,5	*655743	1500	250	17	60
Raku 3	*655743	3000	250	17	60
Raku 5	*655743	5000	250	17	60

Spring loaded safety crank Sifeku

- Without pawl.
- Silent
- Recoil proof
- Maintenance-free
- Enclosed housing
- Weather and temperature resistant.
- Braking effect at both ends.
- The load is held safely at every height, in the pushing and pulling direction.
- Approved by the TÜV as an independent crank.
- With folding handle.

Technical data spring loaded safety crank Sifeku

Model	EAN-No. 4025092*	Capacity kg	Length of crank mm	Square drive mm	Drive torque max. Nm
Sifeku 1,5	*562522	1500	250	14	60
Sifeku 3	*562522	3000	250	14	60
Sifeku 5	*562522	5000	250	14	60
Pfaff design					
Sifeku 1,5	*984041	1500	250	17	60
Sifeku 3	*984041	3000	250	17	60
Sifeku 5	*984041	5000	250	17	60

Crank with folding handle for model ZWW-L (only optional)

- Crank with collapsible handle, length of crank = 200 mm for ZWW-L 250 and 1000 EAN-No. 4025092 652025
- Crank with collapsible handle, length of crank = 250 mm for ZWW-L 500 EAN-No. 4025092 651882

INFO

For ordering the crank of the models STW-F, STW-V, STW-FvB, KHB and SCH-W it takes note to specify the manufacture year, capacity and the dimension of the square!

Safety spring-lock with plug crank Sifespe

- Plug crank removable
- No ratchet pawls in use
- Silent
- Maintenance-free
- Housing
- Weather and temperature resistant
- Braking effect at both ends
- The load is held safely at every height
- Handle not folding

Arm length 250 mm

- Square drive 14 mm or 17 mm

Safety spring-lock EAN-No. 4053981 022680
Plug crank EAN-No. 4053981 001968

Steel jack acc. to DIN 7355 model SJ

Capacity 1500 - 10000 kg

Mechanical steel jacks can basically be used to lift almost all kinds of loads in maintenance and repair, ship building, construction as well as agriculture.

Features

- The precisely machined gear box with optimal gear ratio ensures a minimum of effort and smooth operation.
- The load is supported either on the claw or the head of the steel jack.
- By turning the operating lever the jack moves smoothly and conveniently up and down along the rack.
- The self-locking, anti-kickback operating lever reduces the risk of injuries. The handle can be tilted for use in confined spaces.
- The load is held securely in any position. Inside the load brake the axial brake pressure is generated by the load itself, thus, it is proportional to the size of the load.
- No reduction of capacity on the claw.

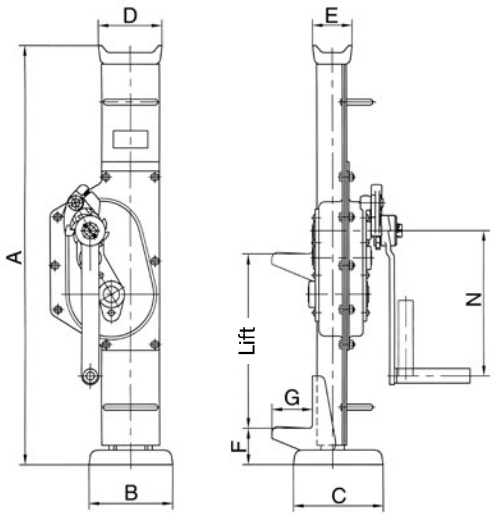

Technical data model SJ Siku

Model	EAN-No. 4025092* **Siku**	Capacity kg	Height A mm	Height of lift [1] mm	Hand effort at WLL daN	Weight kg
SJ 15	*080897	1500	725	360	28	17
SJ 30	*079877	3000	735	360	28	20
SJ 50	*079884	5000	730	350	28	27
SJ 100	*080903	10000	800	410	56	43

[1] Height of lift = Height + Lift

Dimensions model SJ

Model	SJ 15	SJ 30	SJ 50	SJ 100
A, mm	725	735	730	800
B, mm	164	200	190	252
C mm	140	140	170	170
D, mm	76	83	108	124
E, mm	38	38	52	65
F, mm	70	70	80	85
G, mm	60	65	71	86
N, mm	225	249	275	300

Steel jacks acc. to DIN 7355 with fixed lifting claw model STW-F

Capacity 1500 - 10000 kg

Steel jacks are traditional hoisting equipment for universal application in the forest and agricultural sector, in the industrial sector for assembly activities and many other fields of application.

Features

- The robust steel design and a toothed rack of solid material increase the service life of the jack.
- Low wear owing to hardened gearing parts and precisely machined teething.
- The precisely machined gears with a high degree of efficiency guarantees low crank forces.
- The load is supported either on the claw or the head of the steel jack.
- Robust base plate for a high level of stability.
- No reduction of capacity on the claw.

Model STW-F
with fixed lifting claw and Sifeku

Technical data model STW-F Siku

Model	EAN-No. 4025092* **Siku**	Capacity kg	Height A mm	Height of lift [1] mm	Hand effort at WLL daN	Weight kg
STW-F 15	*994132	1500	720	350	28	12
STW-F 30	*440875	3000	720	350	28	21
STW-F 50	*996334	5000	720	300	28	26
STW-F 100	*562690	10000	792	300	40	42

[1] Height of lift = Height + Lift

Technical data model STW-F Raku

Model	EAN-No. 4025092* **Raku**	Capacity kg	Height A mm	Height of lift [1] mm	Hand effort at WLL daN	Weight kg
STW-F 15	*563093	1500	720	350	28	12
STW-F 30	*563116	3000	720	350	28	21
STW-F 50	*563147	5000	720	300	28	26
STW-F 100	*563161	10000	792	300	28	42

[1] Height of lift = Height + Lift

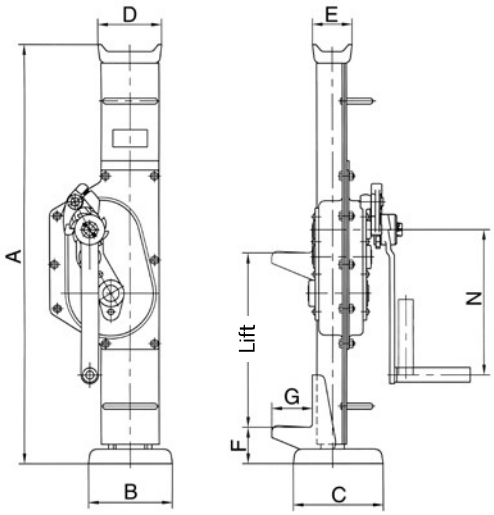

Technical data model STW-F Sifeku

Model	EAN-No. 4025092* 4050939*** **Sifeku**	Capacity kg	Height A mm	Height of lift [1] mm	Hand effort at WLL daN	Weight kg
STW-F 15	*563024	1500	720	350	28	12
STW-F 30	***055493	3000	720	350	28	21
STW-F 50	*562645	5000	720	300	28	26

[1] Height of lift = Height + Lift

Dimensions model STW-F

Model	STW-F 15	STW-F 30	STW-F 50	STW-F 100
A, mm	720	720	720	792
B, mm	130	130	145	145
C, mm	140	140	155	155
D, mm	90	90	110	125
E, mm	50	50	68	80
F, mm	60	61	62	85
G, mm	60	65	70	85
N, mm	250	250	250	300

Model STW-V
1,5 t/3,0 t/5,0 t

Model STW-V 10,0 t

Steel jacks acc. to DIN 7355 with adjustable lifting claw model STW-V

Capacity 3000 - 10000 kg

The design of the steel jack allows for loads to be picked up and lowered from different heights over the entire length of the steel jack.
The adjustable claw is simply set to the appropriate application height in the load bar for this purpose.

Features

- The claw can be moved to any position on the adjusting rail.
- The load is supported either on the claw or the head of the steel jack.
- Robust base plate for a high level of stability.
- No reduction of capacity on the claw.

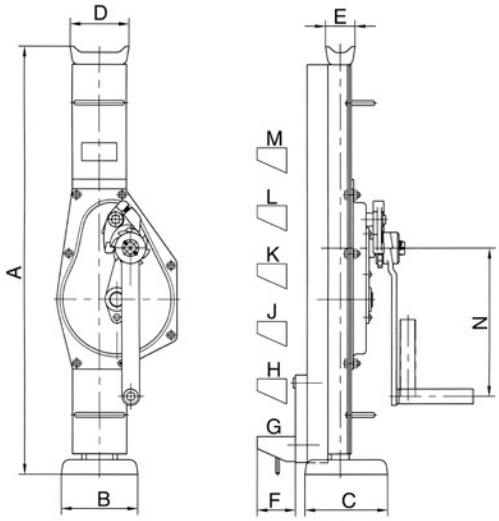

Dimensions model STW-V

Model	STW-V 15	STW-V 30	STW-V 50	STW-V 100
A, mm	725	725	725	800
B, mm	130	130	140	140
C, mm	140	140	160	160
D, mm	90	100	110	140
E, mm	50	50	68	76
F, mm	70	70	70	70
G, mm	80	80	80	95
H, mm	Claw freely adjustable on load bar (55 mm steps)			201
J, mm				307
K, mm				413
L, mm				519
M, mm				625
N, mm	250	250	250	300

Technical data model STW-V Siku

Model	EAN-No. 4025092* **Siku**	Capacity kg	Height A mm	Height of lift [1] mm	Hand effort at WLL daN	Weight kg
STW-V 15	*347327	1500	725	350	28	17
STW-V 30	*347365	3000	725	350	28	23
STW-V 50	*347389	5000	725	300	28	29
STW-V 100	*347426	10000	792	300	40	46

[1] Height of lift = Height + Lift

Technical data model STW-V Raku

Model	EAN-No. 4025092* **Raku**	Capacity kg	Height A mm	Height of lift [1] mm	Hand effort at WLL daN	Weight kg
STW-V 15	*347402	1500	725	350	28	17
STW-V 30	*347440	3000	725	350	28	23
STW-V 50	*347549	5000	725	300	28	29
STW-V 100	*347570	10000	792	300	40	46

[1] Height of lift = Height + Lift

Technical data model STW-V Sifeku

Model	EAN-No. 4025092* **Sifeku**	Capacity kg	Height A mm	Height of lift [1] mm	Hand effort at WLL daN	Weight kg
STW-V 15	*347624	1500	725	350	28	17
STW-V 30	*347631	3000	725	350	28	23
STW-V 50	*347693	5000	725	300	28	29

[1] Height of lift = Height + Lift

Steel jacks acc. to DIN 7355 with fixed lifting claw shortened design model STW-FvB

Capacity 1500 - 5000 kg

Wherever low headroom dimensions are required, the steel jack of shortened design is used.

Features

- The robust steel design and a toothed rack of solid material increase the service life of the jack.
- Low wear owing to hardened gearing parts and precisely machined teething.
- The precisely machined gears with a high degree of efficiency guarantees low crank forces.
- The load is supported either on the claw or the head of the steel jack.
- Robust base plate for a high level of stability.
- No reduction of capacity on the claw.

Technical data model STW-FvB Siku

Model	EAN-No. 4050939*** **Siku**	Capacity kg	Height A mm	Height of lift [1] mm	Hand effort at WLL daN	Weight kg
STW-FvB 15	***055363	1500	600	300	32	11
STW-FvB 30	***055424	3000	600	300	32	16
STW-FvB 50	***055585	5000	600	300	32	22

[1] Height of lift = Height + Lift

Technical data model STW-FvB Raku

Model	EAN-No. 4050939*** **Raku**	Capacity kg	Height A mm	Height of lift [1] mm	Hand effort at WLL daN	Weight kg
STW-FvB 15	***055431	1500	600	300	32	11
STW-FvB 30	***055516	3000	600	300	32	16
STW-FvB 50	***055646	5000	600	300	32	22

[1] Height of lift = Height + Lift

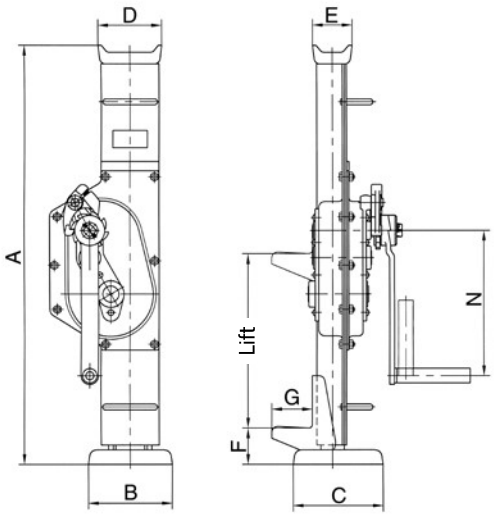

Technical data model STW-FvB Sifeku

Model	EAN-No. 4050939*** **Sifeku**	Capacity kg	Height A mm	Height of lift [1] mm	Hand effort at WLL daN	Weight kg
STW-FvB 15	***055530	1500	600	300	28	11
STW-FvB 30	***055639	3000	600	300	28	16
STW-FvB 50	***055752	5000	600	300	28	22

[1] Height of lift = Height + Lift

Dimensions model STW-FvB

Model	STW-FvB 15	STW-FvB 30	STW-FvB 50
A, mm	600	600	600
B, mm	130	130	145
C, mm	140	140	155
D, mm	90	90	110
E, mm	50	50	68
F, mm	60	61	62
G, mm	60	65	70
N, mm	200	250	250

Rail jacks acc. to DIN 7355 model RSJ

Capacity 5000 kg

Track rails can be quickly and safely lifted by means of this jack, also under unfavourable conditions.
The shoe-type foot with a wider support surface makes it possible to apply the jack between the sleepers and the tracks.

Features

- The precisely machined gear box with optimal gear ratio ensures a minimum of effort and smooth operation.
- The load is supported either on the claw or the head of the steel jack.
- By turning the operating lever the jack moves smoothly and conveniently up and down along the rack.
- The self-locking, anti-kickback operating lever reduces the risk of injuries. The handle can be tilted for use in confined spaces.
- The load is held securely in any position. Inside the load brake the axial brake pressure is generated by the load itself, thus, it is proportional to the size of the load.
- No reduction of capacity on the claw.

INFO

On page 180 you will find also rail grab.

Technical data model RSJ Siku

Model	EAN-No. 4025092* **Siku**	Capacity kg	Height A mm	Height of lift [1] mm	Hand effort at WLL daN	Weight kg
RSJ 50	*039482	5000	740	360	28	29

[1] Height of lift = Height + Lift

Dimensions model RSJ

Model	RSJ 50
A, mm	740
B, mm	200
C mm	250
D, mm	108
E, mm	52
F, mm	90
G, mm	71
N, mm	275

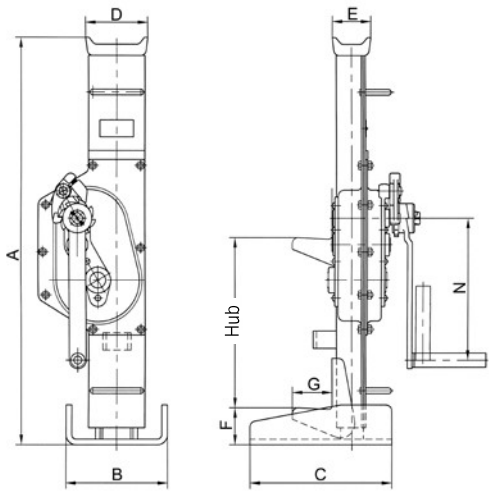

Ratchet jack model Yaletaurus

Capacity 10000 kg

Mechanical ratchet jacks with lifting claw are designed for operation in confined areas where space below the load is restricted, thus preventing the use of traditional lifting equipment. The Yaletaurus is the ideal unit for lifting, positioning or transportation of machines resp. heavy objects as well as for repair and assembly jobs in cramped areas and under toughest conditions.
In spite of its capacity of 10000 kg the Yaletaurus has a weight of just 30 kg and the integrated carrying handle makes it a portable, versatile tool.
With a hand force of 45 kg on the detachable hand lever, the Yaletaurus will lift, press, push or lower a load of 10000 kg in any direction. A standard crank wheel will bring the jack quickly to the required position.

Features

- Automatic screw-and-disc type load brake.
  The axial brake pressure is generated by the load itself and is, therefore, proportional to the size of the load. The load is held secure in any position.
- Single part housing made from spheroidal cast iron with integrated lifting claw.
- The screw-and-disc type load brake originates from the Yale PUL-LIFT® (spare parts are easily available).
- Low lever pull and long life endurance due to optimum gearing and high quality materials.

Technical data model Yaletaurus

Model	EAN-No. 4025092*	Capacity on the head kg	Capacity on the claw kg	Height A mm	Height of lift [1] mm	Hand effort at WLL daN	Weight kg
Yaletaurus	*076043	10000	7000	505	295	45	30

[1] Height of lift = Height + Lift

Dimensions model Yaletaurus

Model	Yaletaurus
A, mm	505
B, mm	170
C mm	125
D, mm	95
E, mm	65
F, mm	75
G, mm	75
H, mm	238
J, mm	217
N, mm	647

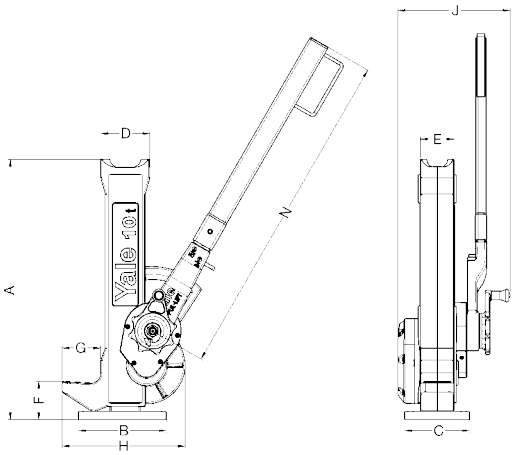

Model ZWW-L
capacity 250 kg and 500 kg

Model ZWW-L
capacity 1000 kg

Model ZWW
capacity 1500 kg

Model ZWW
capacity 10000 kg

Assembly plate
– available for
following models only:
ZWW-L 250 and
ZWW-L 500

Wall-mounted rack and pinion jacks model ZWW-L and model ZWW

Capacity 250 - 10000 kg

Wall-mounted rack and pinion jacks are used for lifting, lowering, pulling and pushing of loads.

Features

- Robust steel design with precisely machined worm and spur gears for smooth and easy manual operation.
- Solid steel rack with additional bore hole for fastening of the load.
- Low wear owing to hardened gearing parts and precisely machined teething.
- Up to 1000 kg lifting load for pushing or pulling loads are equal.
- Suitable for a lifting load from 1500 kg - 10000 kg for pushing or pulling loads.
- Rigid wall mounting.

Options

- Improved corrosion protection owing to zinc-plating or special coating of rack.
- Different rack length on request possible.
- Symmetrical toothing for model ZWW on request possible.
- Crank with folding handle for model ZWW-L suitable.
- Assembly plate (EAN 4053981283401) for model ZWW-L 250 and ZWW-L 500 with old hole separation suitable (165 mm). Thereby a one by one replacement between old model ZWW 250/500 kg and new model ZWW-L is warranted.

Available in explosion proof version (see page 467).

Technical data model ZWW-L

Model	EAN-No. 4025092* **Worm gear**	Tensile or pressure load kg	Rack length mm	Lift mm	Lift per crank rotation mm	Hand effort at WLL daN	Weight kg
ZWW-L 250/400	*437592	250	600	400	11	10	5.4
ZWW-L 500/400	*437752	500	600	400	11	15	6.0
ZWW-L 250/600	*383707	250	800	600	11	10	5.9
ZWW-L 500/600	*383806	500	800	600	11	15	6.5
ZWW-L 1000/600	*383967	1000	800	600	3.6	14	8.9
ZWW-L 250/800	*383448	250	1000	800	11	10	6.4
ZWW-L 500/800	*383837	500	1000	800	11	15	7.0
ZWW-L 1000/800	*383981	1000	1000	800	3.6	14	10.0
ZWW-L 250/1000	*383745	250	1200	1000	11	10	6.9
ZWW-L 500/1000	*383844	500	1200	1000	11	15	7.5
ZWW-L 1000/1000	*384018	1000	1200	1000	3.6	14	11.3
ZWW-L 250/1200	*383783	250	1400	1200	11	10	5.4
ZWW-L 500/1200	*383899	500	1400	1200	11	10	6.0
ZWW-L 1000/1200	*384025	1000	1400	1200	3.6	14	12.4
ZWW-L 1000/1400	*437868	1000	1600	1400	3.6	14	13.6

Technical data model ZWW Sifeku

Model	EAN-No. 4025092* **Sifeku**	Tensile or pressure load kg	Rack length mm	Lift mm	Lift per crank rotation mm	Hand effort at WLL daN	Weight kg
ZWW 1500/800	*654272	1500	1090	800	14	28	11
ZWW 3000/565	*653640	3000	975	565	9	28	19
ZWW 5000/700	*995931	5000	1170	700	4.5	28	28

Technical data model ZWW Siku

Model	EAN-No. 4025092* **Siku**	Tensile or pressure load kg	Rack length mm	Lift mm	Lift per crank rotation mm	Hand effort at WLL daN	Weight kg
ZWW 10000/700	*285087	10000	1240	700	3.2	40	55

Dimensions model ZWW and model ZWW-L

Model	ZWW-L 250	ZWW-L 500	ZWW-L 1000	ZWW 1500	ZWW 3000	ZWW 5000	ZWW 10000	Assembly plate [1]
A, mm	20	20	25	35	45	50	60	200
B, mm	20	25	35	25	30	40	50	10
C, mm	–	–	–	215	280	330	380	165
Ø D, mm	11	13	16.5	21	21	21	30	13
E, mm	16	20	20	20	25	25	30	15
F, mm	130	130	127	135	165	140	160	6
G, mm	119	119	98	151	212	219	269	75
H, mm	200	200	180	310	395	400	480	50
I, mm	–	–	34.5	168	179	197	200	60
J, mm	38	35	29.5	26	31	37	39.5	13
K, mm	–	–	–	100	120	120	140	34
L, mm	60	60	140	130	160	160	180	–
M, mm	170	170	140	260	305	320	410	–
Ø N, mm	11	11	13	12.5	14.5	17	21	20
O, mm	–	–	100	110	120	105	125	–
P, mm	–	–	–	40	50	50	60	–
Q, mm	10	10	–	8	10	10	10	–
R, mm	200	250	200	250	250	250	300	–
S, mm	110	110	110	130	130	130	250	10
T, mm	–	–	–	42.4	86.25	109.1	150.4	–
U, mm	–	–	–	43.3	53.1	69.5	88.3	–
X, mm	–	–	–	20	25	45	30	–
Ø Z, mm	–	–	–	–	–	–	–	8.2

[1] available for following models only ZWW-L 250 and ZWW-L 500

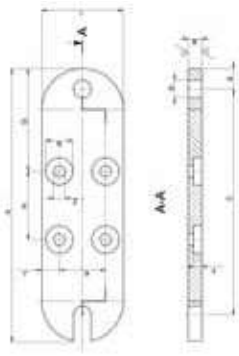

Assembly plate
– available for following models only: ZWW-L 250 and ZWW-L 500

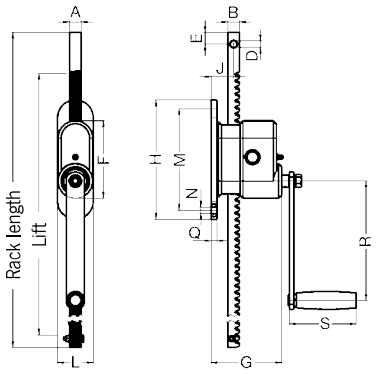

Model ZWW-L, capacity 250 - 500 kg

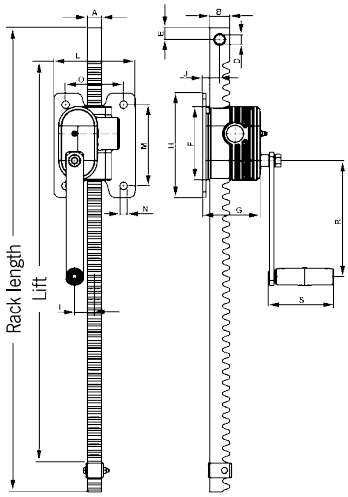

Model ZWW-L,capacity 1000 kg

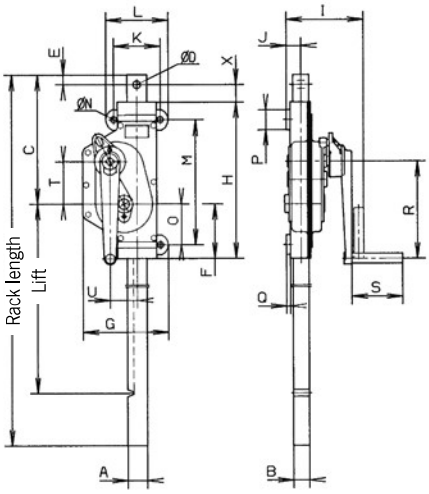

Model ZWW, capacity 1500 - 10000 kg

Model ZWW-L combinations

Capacity 1000 kg

Wall-mounted rack and pinion jacks can also be coupled if it is necessary that both racks have to lift a load uniform. Thereby the direction - depending on the model - plays no matter.
The wall mounted rack and pinion jacks can be combine about ¾" and/or 1" pipes (DIN 2440). When connecting pipes over a length of 2 m, we recommend the pipes to stabilize so that it does not droop in the middle.

We like to advise you in this case.

On systems with several racks in line at 90° to the crank axis

- Self-locking action **only gear unit with crank**
- Crank force = 15 kg, at a **maximum** total load of 1000 kg
- Connection to 1" tube (DIN 2440) on building side
- This combination is also possible for model ZWW-L 250 and model ZWW-L 500.

On systems with several racks in line to the crank axis

- Self-locking action in **every gear unit**
- Crank force = 15 kg with a total load of 1000 kg
- Connection to ¾" tube (DIN 2440) on building side

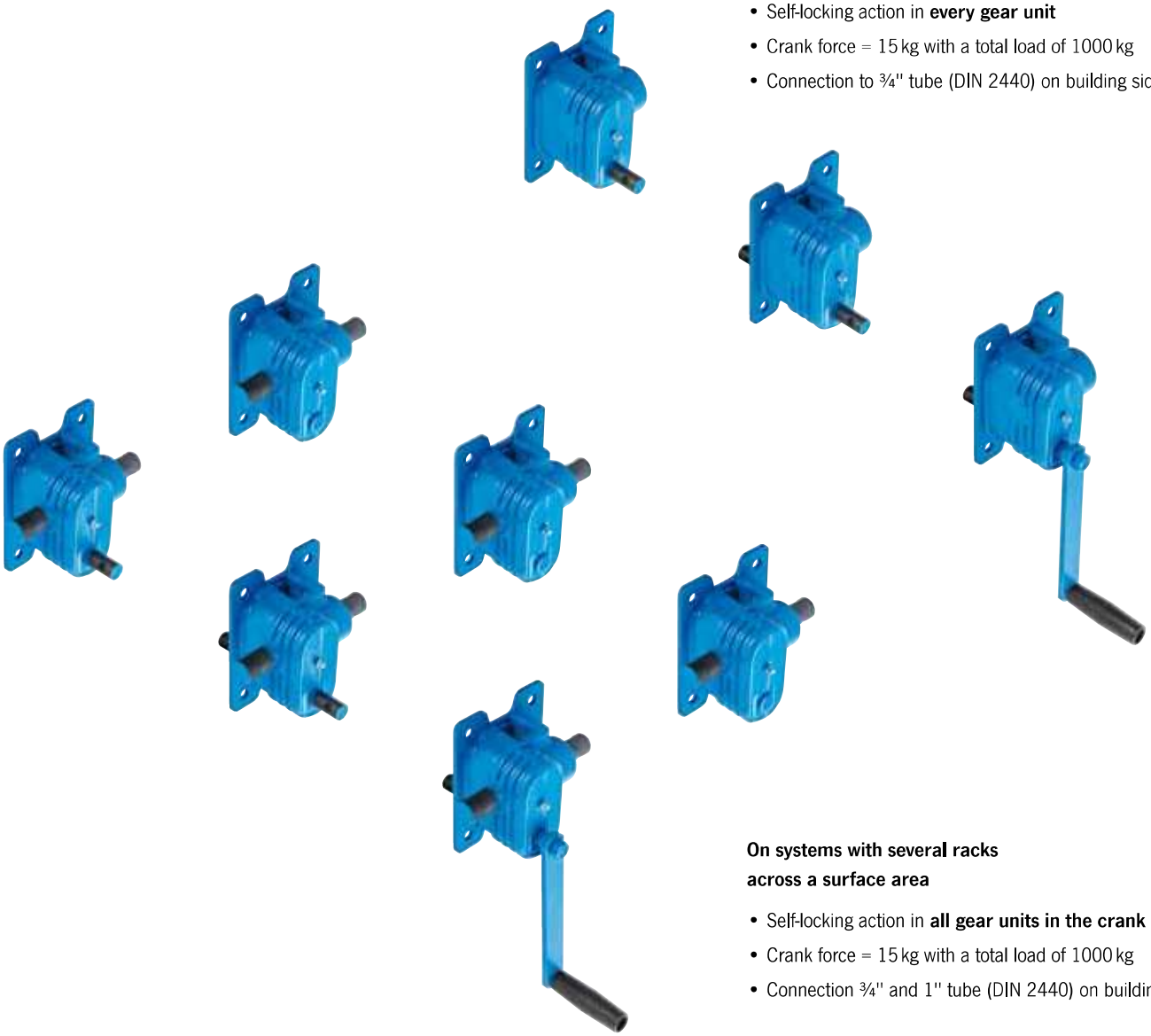

On systems with several racks across a surface area

- Self-locking action in **all gear units in the crank axis**
- Crank force = 15 kg with a total load of 1000 kg
- Connection ¾" and 1" tube (DIN 2440) on building side

Gearbox with rack and pinion shaft acc. to 7355 model GmZ

Capacity 1500 - 5000 kg

The gearbox with rack and pinion shaft show exactly what it can do in the areas of plant engineering/construction, agriculture and workshops.

Features

- The robust steel design and a toothed rack of solid material increase the service life of the jack.
- Low wear owing to hardened gearing parts and precisely machined teething.
- The precisely machined gears with a high degree of efficiency guarantees low crank forces.

Technical data model GmZ Sifeku

Model	EAN-No. 4025092* 4050939*** **Sifeku**	Tensile or pressure load kg	Rack length mm	Lift mm	Lift per crank rotation mm	Hand effort at WLL daN	Weight kg
GmZ 1500/350	***055356	1500	675	350	14	28	9
GmZ 3000/350	***055448	3000	670	350	8	28	18
GmZ 5000/300	*005714	5000	628	300	4	28	22

Dimensions model GmZ

Model	GmZ 1500/350	GmZ 3000/350	GmZ 5000/300
A, mm	35	45	50
B, mm	25	30	40
C, mm	295	275	275
D, mm	125	204	189
E, mm	78	92	100
F, mm	33.5	39.5	51
G, mm	270	260	260
H, mm	655	655	655
I, mm	42	86	109
J, mm	43	53	70
K, mm	250	250	250
L, mm	130	130	130
M, mm	142	148	160
N, mm	173	183	202
O, mm	337	361	384

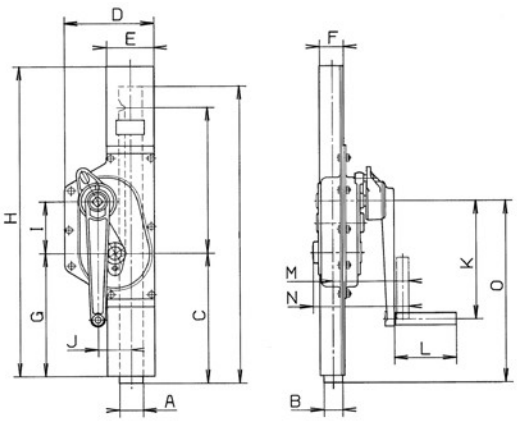

Crank
in special design
on request
EAN-No. 4053981 964942

Lifting jack model HB-W

Capacity 1500 kg

The stable lifting jack with integrated 1,5 t steel jack for supporting tube and bar material.

Features

- Load will be fixed in each position safely by a load brake system.
- Large base plate for a high level of stability.
- Wheels for easy transport.

Option

- The removable supporting roller facilitates sliding of heavy loads.

Technical data model HB-W

Model	EAN-No. 4053981** **Siku**	Capacity kg	Height mm	Lift [1] mm	Hand effort at WLL daN	Lift per crank rotation mm	Weight kg
HB-W 1500	**745879	1500	650	350	28	15	40

[1] Lifting height = Height + Lift

Technical data supporting roller HB-A

Model	EAN-No. 4050939***	Capacity kg	Height with supporting roller mm	Weight kg
Supporting roller	***055264	1500	705	5

Dimensions model HB-W

Model	HB-W 1500
A, mm	300
B, mm	500
C_{ein}, mm	650
D_{aus}, mm	1000
E, mm	100
F, mm	320
G, mm	300
H, mm	385

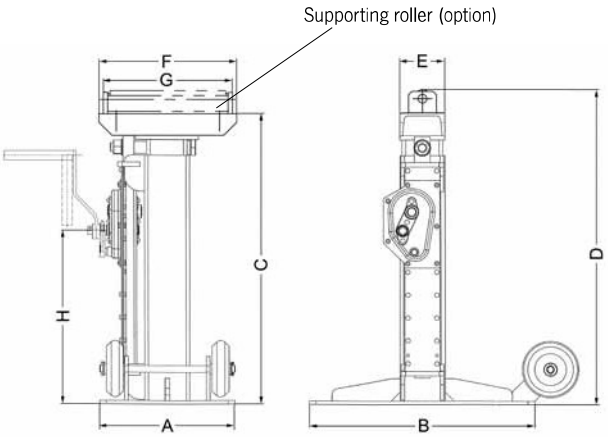

Truck body lifting jack model KHB

Capacity 5000 and 8000 kg

Truck body lifting jacks are used for supporting vehicle bridges, swap bodies and trailers; they are also used in vehicle construction and freight forwarding applications.

Features

- High-quality, torsionally stiff steel design with large base plate for a high level of stability.
- Hardened gearing parts and precisely machined teeth-ing for improved handling and low wear.
- The load can either be supported on the head or on the adjustable claw.

Model KHB 5
capacity 5000 kg

Model KHB 8
capacity 8000 kg

Technical data model KHB Siku

Model	EAN-No. 4050939*** **Siku**	Capacity kg	Height mm	Lift [1] mm	Hand effort at WLL daN	Dim. B mm	Dim. C mm	Dim. D mm	Dim. E mm	Dim. F mm	Dim. O/P mm	Weight kg
KHB 5000/500	***055110	5000	1100	500	18	540	500	80	140	250	70/70	80
KHB 8000/500	***055196	8000	1100	500	26	540	500	100	170	300	150/180	111

[1] Lifting height = Height + Lift

Step height of adjustable lifting claw

Model	KHB 5000	KHB 8000
1. step, mm	175	290
2. step, mm	230	396
3. step, mm	285	502
4. step, mm	340	608
5. step, mm	395	714
6. step, mm	450	820
7. step, mm	505	926
8. step, mm	560	1032
9. step, mm	615	–
10. step, mm	670	–
11. step, mm	725	–
12. step, mm	780	–
13. step, mm	835	–
14. step, mm	890	–

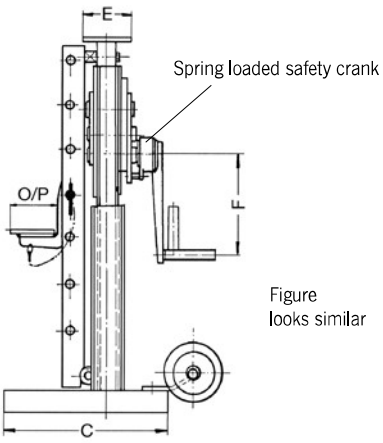

Figure
looks similar

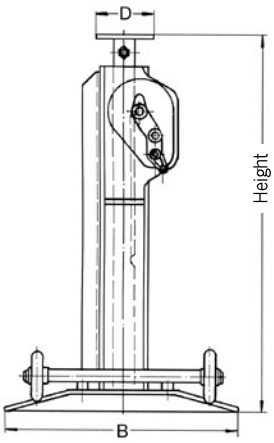

Model S 20

Model S 24

Worm gear drive unit model S 20 and model S 24

The worm gear drives are suitable for a large variety of applications in construction for moving or turning loads, as gears for rope drums or chain sprockets or slewing drives.

Features

- Enclosed housing for the protection of parts inside.
- Enclosed and precisely machined gear for little effort and a long service life.

Technical data model S 20 and model S 24

Model	EAN-No. 4050939***	Ratio	Drive torque daNm	Required crank effort daN	Shaft length mm	Shaft diameter mm
S 20	***055257	20:1	12	11	196	25
S 24	***055462	24:1	36	22	200	36

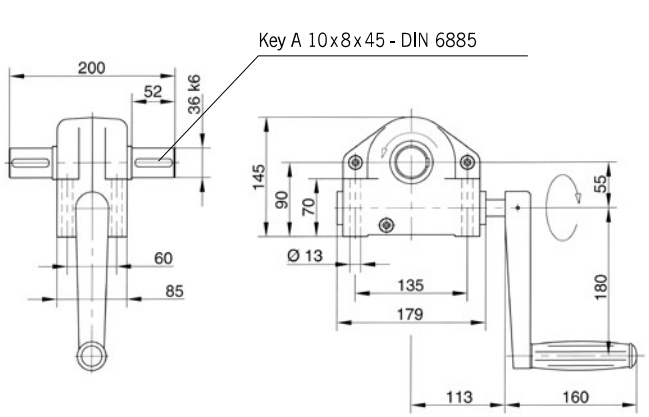

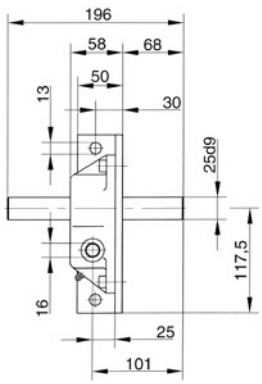

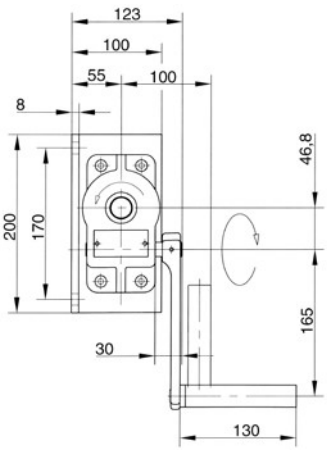

Sluice gate jack model SCH-W

Capacity 1500 - 10000 kg

The reliable sluice gate jack for opening and closing gates in sluices.

Features

- The spring loaded safety crank permanently holds the sluice gate closed with pressure.
- Hardened gearing parts and precisely machined teeth-ing for improved handling and low wear.

Technical data model SCH-W Sifeku

Model	EAN-No. 4025092* **Sifeku**	Tensile or pressure load [1] kg	Rack length mm	Lift mm	Hand effort at WLL daN	Weight kg
SCH-W 15	*915175	1500	1200	800	28	18
SCH-W 30	*991698	3000	1250	800	28	23
SCH-W 50	*915182	5000	1350	900	28	32

[1] The pressure force is reduced with a larger lift (loading case II to Euler)

Technical data model SCH-W Siku

Model	EAN-No. 4025092* **Siku**	Tensile or pressure load* kg	Rack length mm	Lift mm	Hand effort at WLL daN	Weight kg
SCH-W 100	*911481	10000	1550	1000	40	56

INFO

Please fill in the questionnaire on the next page for sluice gate jack systems.

Dimensions model SCH-W

Model	SCH-W 15	SCHW-30	SCHW-50	SCH-W 100
A, mm	35	45	50	60
B, mm	25	30	40	50
C, mm	140	160	145	165
D, mm	85	60	45	65
E, mm	125	204	189	235
F, mm	78	92	100	112
G, mm	175	230	260	320
H, mm	310	395	400	480
I, mm	33.5	39.5	51	59
J, mm	43.3	53.1	69.5	88.3
K, mm	121	138	81	84
L, mm	230	230	230	290
M, mm	90	90	90	115
N, mm	153	158	173	183
O, mm	52.5	55	61	66
P, mm	52.5	55	64	70
Ø Q, mm	14	14	14	14
R, mm	7	7	7	8
S, mm	76.5	85.5	88	100
T, mm	100.5	108.5	120	140
U, mm	113	121	132	185
V, mm	86	94	105	–
W, mm	136	144	155	–
X, mm	130	130	130	250
Y, mm	250	250	250	300

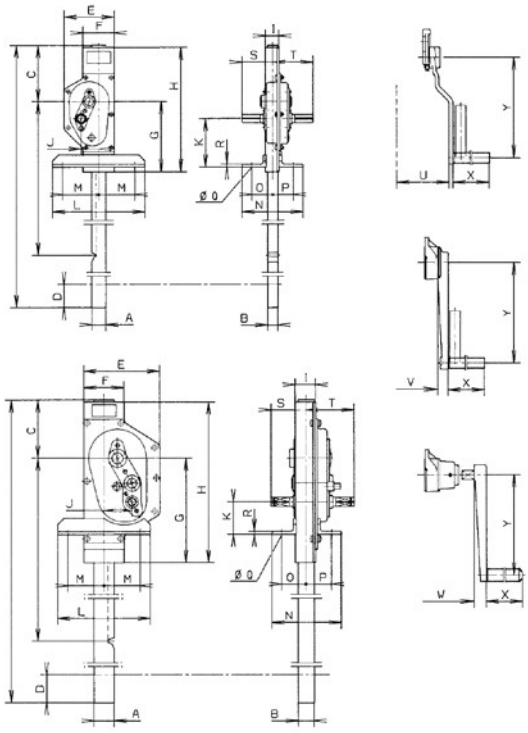

Technical questionnaire to identify a suitable sluice gate jack systems

Company: _____ Date: _____

Contact: _____ e-Mail: _____

Phone: _____ Fax: _____

☐ Manual drive

Manual operating force _____ kN

Sluice gate

Thickness _____ mm

Material

☐ Wood

☐ Steel

Weight _____ kg

Friction coefficient

☐ Steel/Wood

☐ Steel/Rubber

☐ Roller gate

☐ Motor drive with manual emergency drive

Lifting speed ☐ Standard

_____ m/min

Operating voltage _____ V

_____ Hz

☐ 230/400 V, 50 Hz three-phase current

Motor rating

Load cycles per hour _____

Lift per load cycle _____

Surrounding temperature _____

Remark

_____

Quantity

_____

Accessories

☐ Lifting motion limitation

☐ Electrical cut-out by safety clutch

☐ Auma rotary drive

Indicate local conditions and water levels

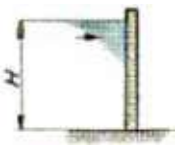

H = _____

☐ without water below

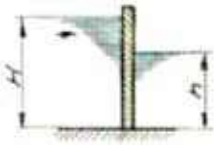

H = _____

h = _____

☐ with water below

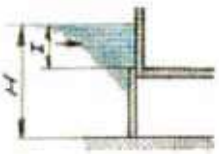

H = _____

l = _____

☐ completely in water above

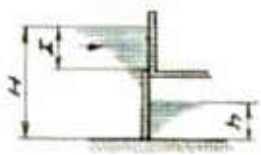

H = _____

l = _____

h = _____

☐ completely in water above, partly in water below

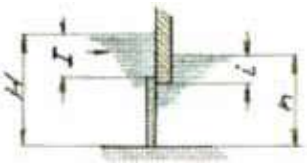

H = _____

l = _____

h = _____

i = _____

☐ completely in water above and in water below

Technical questionnaire to identify a suitable sluice gate jack systems

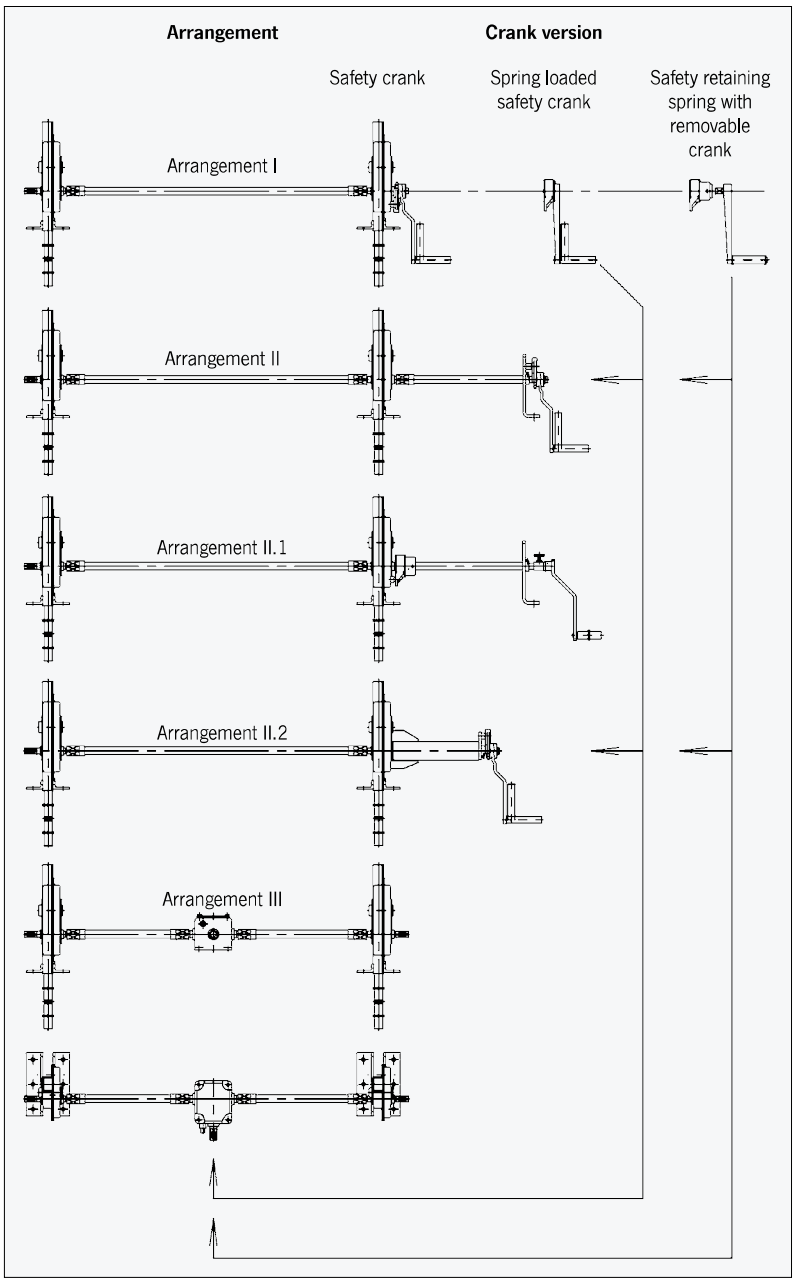

Arrangement

Crank version

(Retaining springs not possible for 10 t model)

Date

Name

Application

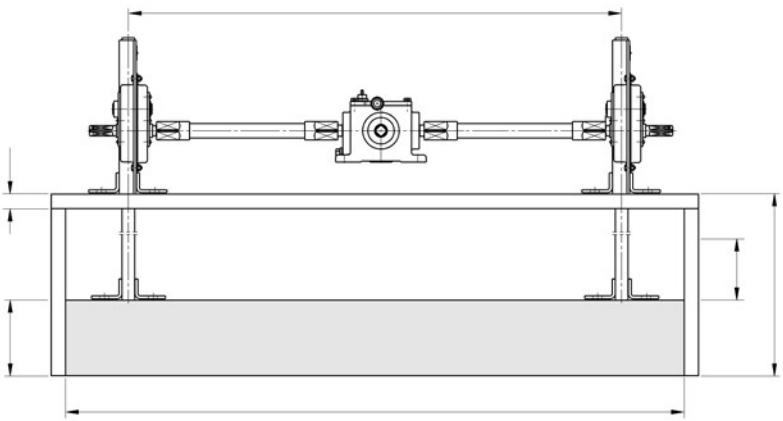

INFO

This user information presents a general review regarding the application of cranes and does not substitute the existing operating instructions for specific products!

Lifting and slewing operations may be carried out by competent users (trained in theory and practice) only. When operated correctly, our cranes will offer the highest degree of safety in line with long life expectancy and avoid damage to products and people.

Yalesystems cranes are manufactured in accordance with the machinery directive 2006/42/EC and the latest DIN 15018 H2 B2 (gantry cranes H2 B3) and correspond to the VDE regulations.

All components are mechanically shot blast, then primed and coated with RAL 1023 (yellow) paint, D.F.T. approx. 60 micron.

Modification of delivery condition

Design and finish of the cranes may not be modified by e.g. installation of outside supplied parts, bending, welding, grinding, removal of parts, added bores, removal of safety devices like locking mechanisms, locking pins, safety latches etc.

Limitations of operation

Temperature

Cranes may normally be operated at ambient temperatures between -10 °C up to +50 °C. These values are approximate and may deviate from the specific givings of the product concerned. The accurate data are given in the current operating instructions.

Chemicals

Cranes may not be operated without hesitation in the area of chemicals or chemical vapours – consult our specialists for advice. Cranes which have been subject to chemicals or vapours must be taken out of service and inspected by us.

Transport of people

Transport of people with cranes is generally forbidden!

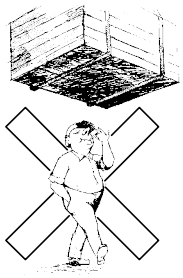

Operation in danger zones

Lifting or transport of loads must be avoided while personnel are in the danger zone. People are not allowed to pass over or under a suspended load.

Electrical hazards

Please consult the specific operating instructions for possible electrical hazards. Electrical connections may only be performed by authorized persons resp. companies!

Maintenance and repair

To ensure safe operation, all cranes must be subjected to regular inspections according to the maintenance instructions given by the manufacturer (for legal obligations refer to DGUV Vorschrift 52 [BGV D6]).

Depending on the frequency and impact of applications, the crane has to be maintained, at least once per year or in case of obvious damages, by competent persons resp. inspectors.

Repairs and inspections may only be carried out by competent persons resp. inspectors who use original spare parts. Repairs and inspections must be recorded consecutively.

Inspections

The contractor has to make sure that powered cranes are inspected prior to initial operation and after significant modifications by a competent person. This is also applicable for hand operated cranes with a capacity of more than 1000 kg.

For cranes according to § 3a para. 3 DGUV Vorschrift 52 (BGV D6) the inspection before initial operation consists of advance survey, inspection of building and quality acceptance.

The inspection prior to initial operation is not required for cranes, which are delivered ready-to-use and with certificate of a type approval or EC declaration of conformity.